Zilver Normal Basin Mixer (American Series)

Item code

AM1001,AM1001MB

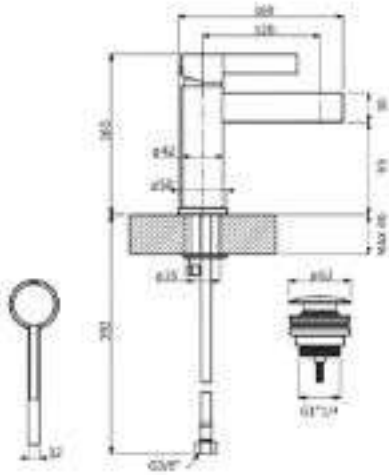

The American Series Faucet Basin Mixer is a high-quality, elegant bathroom fixture designed to provide both style and functionality. This basin mixer faucet is a popular choice in modern bathroom settings due to its long spout, ergonomic design, and efficient water flow control. Typically used in sinks or basins, this type of faucet offers enhanced reach and ease of use, making it ideal for everyday bathroom tasks.

Features

- Spout Design
- Single-Lever Mixer
- Material and Finish
- Water-Saving Technology
- 360-Degree Swivel Spout

www.zilver.co